Protection of a Motor up to 200 kW

1. Introduction

Drive motors often play a decisive role in the functioning of a production process. Motor damage and breakdowns not infrequently lead also to consequential damage and production shutdowns, the cost of which significantly exceeds the cost of repairing the motor. Optimum design of the motor protection ensures that damage following thermal overload is prevented, meaning that there is no reduction to the normal service life. Secondary faults are minimized in the event of short-circuits, earth faults and winding faults.

The spectrum extends from small low-voltage motors with an output of a few kW to high-voltage motors with outputs measured in MW. Protection system design must be based on the rating of the motor, the importance of the drive for the technological process, the operating conditions and the requirements of the motor manufacturer.

The setting of a SIPROTEC protection relay for motor protection is described below taking a high-voltage motor (10 kV) as the example.

2. The tasks of motor protection

Motors have some striking features in their operating conditions. These are important for understanding the various possible causes of failure and must be taken into account when designing protection systems.

2.1 Protection of the stator against thermal overload

The power drawn by the motor from the supply system during operation is supplied to the shaft as mechanical power for the production machine. The power lost to the winding during this energy conversion is the decisive factor for the arising motor temperatures. The loss of heat is proportional to the square of the current. The motor heating time characteristic is determined by its heat storage capability and heat transfer properties, and characterized by the thermal time constant [τ]. Electrical machines are at particular risk from long-term overload. Thermal overloading of the motor leads to damage to the insulation and therefore to secondary faults or to a reduction in the total service life of the motor.

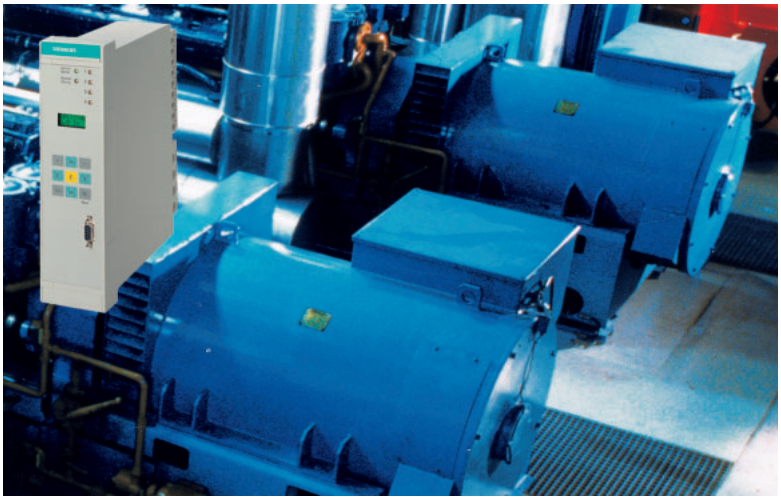

LSP2731.tif

Fig. 1 SIPROTEC 7SJ602 multifunction protection

Such overloading cannot and should not be detected by short-circuit protection since any potential delay must be very short on these occasions. Overload protection prevents thermal overloading of the motor to be protected. The 7SJ602 relay detects stresses either before overload occurs (overload protection with complete memory = thermal replica) or only after exceeding a preset start-up current (overload protection without memory function).

- Overload protection without memory
  If overload protection without memory is chosen, the tripping time is calculated according to a simple formula. Pre-stressing is not taken into account because currents are only recorded if they are greater than 1.1 times the set value.

$$t = \frac{35}{(I / I_B)^2 - 1} \cdot t_{6IB} \quad \text{for } I > 1.1\, I_B$$

t	Tripping time
I	Overload current
I_B	Set threshold
t_{6IB}	Set time factor (t6-time = tripping time when applying 6 times the actual set value I_B)

SIEMENS
siemens-russia.com

- Overload protection with memory
  The relay calculates the temperature rise in accordance with a thermal homogenous-body model and a thermal differential equation. In this way the previous load, with all load cycles, can be recorded and evaluated correctly by the relay. Such a thermal replica can be optimally adapted to the overload capacity of the protected equipment.

2.2 Protection of the rotor from thermal overload

Among the many causes of excessive temperatures caused by currents in motors is an unacceptably long start-up time or, in limit cases, blocking of the rotor. Such conditions are caused by an excessive mechanical load torque, such as can occur in overfilled mills and breakers or overloaded centrifuges, etc.

- Start-up time monitoring
  The protection relay has start-time monitoring, which represents a meaningful addition to overload protection for electrical machines. The trip time depends on the current. This enables even extended start-up times to be correctly evaluated when the start-up current is reduced because of voltage sags when the engine is started. The start-up time monitoring begins when a set current level is exceeded. The trip time depends on the actual measured start-up current. If the permissible locked rotor time is shorter than the start-up time, the rotational speed (motor stationary or rotating) must also be requested via a binary input.

- Restart inhibit
  Restart inhibit prevents the motor restarting if, during this start-up, the permissible rotor heating is expected to be exceeded.
  The rotor temperature of a motor generally lies well below its permitted temperature limit both during normal operation and with increased load currents. On the other hand, during start-up, with the associated high start-up currents, the rotor is at a higher risk of thermal damage than the stator because of its smaller thermal time constant. The motor must be prevented from switching on if the permissible rotor heating is expected to be exceeded during this start-up. This is the task of the restart inhibit. Because the rotor current is not directly measurable, stator currents must be relied upon from which the rotor temperature is indirectly calculated. It is therefore assumed that the thermal limit values for the rotor winding in the data provided by the motor manufacturer for the rated start-up current equal the maximum permitted start-up time and the number of the permitted start-ups from cold (n_c) and operating temperature (n_W) conditions. The relay calculates from this the value of the thermal rotor replica and gives a blocking command until the thermal replica of the rotor reaches a value below the restart limit and therefore permits a new start-up. As long as a blocking command prevails, switching on by the relay's integrated switch control is prevented. In this case, it is not necessary to allocate the restart inhibit's blocking command to a command relay or an external link with the switch control. If however the motor can be switched on from another position, an output relay must be allocated to the blocking command and its contact looped into the starting circuit.

2.3 Negative-sequence protection

In protection of the motor, negative sequence (unbalanced load) protection assumes particular importance. Unbalanced loads produce a reverse field in motors which drives the rotor at twice the frequency. Eddy currents are induced on the surface of the rotor, leading to local temperature rises in the rotor. If the motor is protected by fuses, a phase voltage failure is a frequent fault in practice. During this breakdown, the line-to-line voltage is fed to the stator winding by the remaining working phases. Depending on the load, a more or less circular rotating field is maintained by the motor, so that it can develop sufficient torque with increased current input. There is also the risk of thermal overload if the system voltage is unbalanced. Even small voltage unbalances can lead to large negative sequence currents because of the small negative sequence reactance.

SIEMENS
siemens-russia.com

The 7SJ602's negative-sequence protection filters the fundamental out of the fed phase currents and breaks it down into balanced components (negative phase-sequence system I_2 and positive phase-sequence system I_1). The "negative phase-sequence system/rated current (I_2/I_N)" relationship is assessed to detect the unbalanced load. The negative-sequence protection is set up in two stages. After reaching a first, adjustable threshold I_2> a time stage TI_2>is started; after reaching a second, adjustable threshold I_2>> the time stage TI_2>> is started. After one of the operating times has passed a tripping command is set up. The threshold comparison can only be made if the largest of the three phase currents is at least 10 % of the rated current.

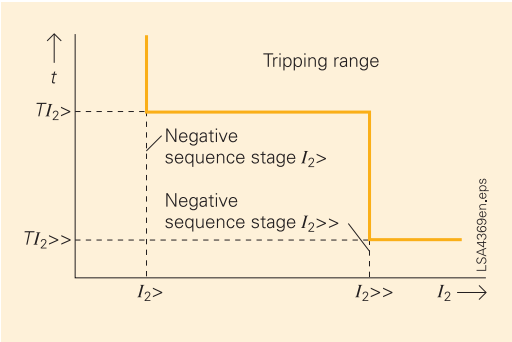

Fig. 2 Characteristics of the negative sequence protection

2.4 Earth-fault protection

When designing earth-fault protection it is important to know how the star point of the power supply system is connected. This must also be taken into account when selecting protection relay hardware. Two versions of the 7SJ602 are available, differing in the design of the transformer inputs.

7SJ6021../7SJ6025.. for low-resistance earthed power systems

The relay has a fourth input transformer with "normal" sensitivity for recording the earth current. This can be connected to the star point lead wire of the current transformer unit or to a separate core-balance current transformer.

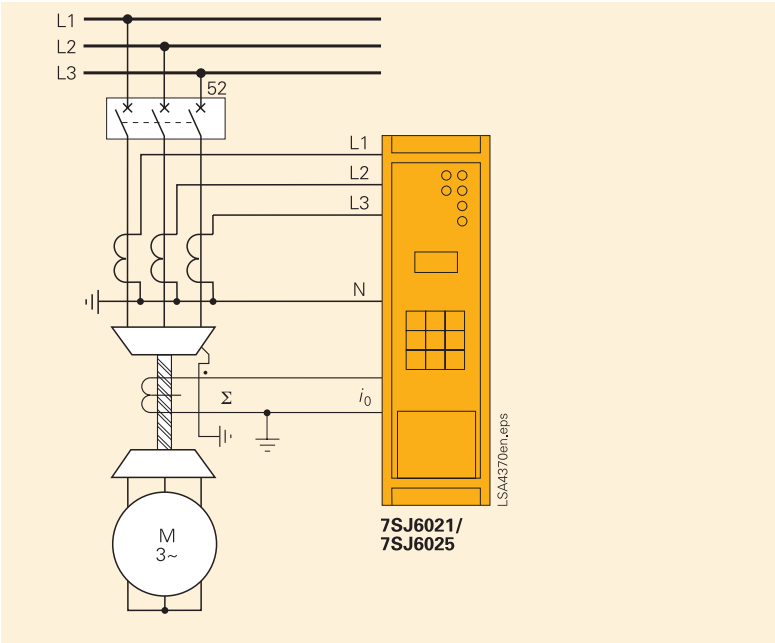

Fig. 3 Connection of 4 CTs with measurement of the earth current

7SJ6022../7SJ6026.. for resonant-earthed, isolated or high-resistance earthed power systems

The relay has two phase current transformers, a sensitive earth current input and a voltage input, e.g. to record U_{en} Voltage.

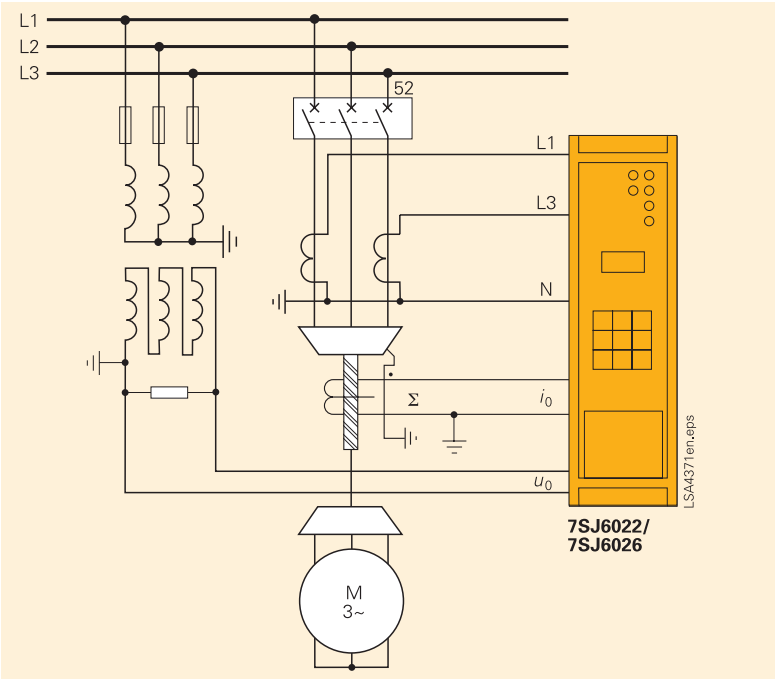

Fig. 4 Connection of 3 CTs and 1 VT with measurement of the earth current and one phase voltage

SIEMENS
siemens-russia.com

Earth-fault protection detects earth faults in the stator winding of three-phase machines. Because motors are usually connected directly by a busbar to a power supply system (directly connected to a busbar) it is important to recognize whether the earth fault is in the machine feeder or on another feeder of the busbar.

With earthed systems, this can usually be clearly recognized from the magnitude of the earth current. When a fault occurs in the machine, the full earth-fault current driven by the power supply system flows via the protection measuring point. The machine must be isolated from the power supply system as quickly as possible to prevent more damage. When there is a power system earth-fault the recorded earth current is essentially determined by the machine capabilities and therefore considerably smaller. There must be no tripping.

In compensated, isolated and low-resistance earthed systems, a design with sensitive earth-current input and sensitive earth-fault detection should be chosen. The high-resistance earth-fault detection then replaces the earth-current stage of the overcurrent-time protection. Because of its high sensitivity it is not suitable for detecting earth faults with large earth currents (more than around $1.6 \cdot I_N$ on the terminals for sensitive earth-current connection).
Overcurrent-time protection for earth currents must be used here.
Should the magnitude of the earth current be sufficient to determine the earth fault, no voltage input is needed. The 7SJ602 has a two-stage current/time characteristic which works with earth-current values. They are appropriate where the magnitude of the earth current enables the location of the earth fault to be defined. This can, for example, happen with machines on low-resistance earthed systems (with earth-current limiting).

With machines directly connected to a busbar to isolated power systems, it is essential that the capacity of the upstream power system delivers a sufficiently large earth current but that the earth current at the relay location is comparably small in the case of earth faults on the power system side. The magnitude of the earth current is used to reach a decision on the position of the fault location.

If this is not the case an additional earth-current production device must be installed on the busbar. This produces a defined earth current during an earth fault. The connected displacement voltage is then used to make a direction decision. Should a load device (earth-current production device) be installed, it should only be used when dimensioning the setting in order to be independent of the circuit state in the power supply system. With machines in compensated power supply systems a load device and measurement of the displacement voltage are always recommended so that a safe earth-fault decision can be made.

2.5 Short-circuit protection

The task of the short-circuit protection when a short-circuit occurs is both to prevent increased damage to the motor (destruction of the iron core, etc.) by quickly switching off the motor and to minimize the effect on the power supply system with its connected loads (voltage unbalance, voltage sags, etc.).

The overcurrent-time protection in the 7SJ602 can take the form both of definite-time overcurrent-time protection and of inverse-time overcurrent-time protection. For the latter, a range of characteristics defined in IEC 60255---3 or in ANSI standards is available. A high-current stage *I*>>, which always works with definite tripping time, can be superimposed on the selected overcurrent characteristics. An instantaneous tripping stage *I*>>> can also be superimposed on the phase branches. In this way the tripping characteristics can be optimally adapted to the motor's start-up characteristics.

In order to be able to switch off during high current faults in the machine, the 7SJ602 has a special instantaneous tripping stage. The *I*>>> stage must be set safely above the motor's inrush current, so that switching on the motor does not lead to tripping. Experience has shown that the inrush currents can be around 1.5 to 1.6 times the start-up current.

The *I*>> stage should be set above the motor start-up current to prevent tripping. With the time delay *TI*>> the period of the inrush current must be taken into account. Because the inrush current lasts only a few ms, the *TI*>> can be selected at around 50 ms.

SIEMENS
siemens-russia.com

In the overcurrent-time protection function an inverse-time characteristic must be chosen since this can be better adapted to the motor's operational performance.

The inverse-time short-circuit protection I_p> protects the motor from short-circuits during operation in transient condition (after ramping up). The higher the short-circuit current the quicker the tripping. The extreme inverse characteristic must be selected as tripping characteristic.

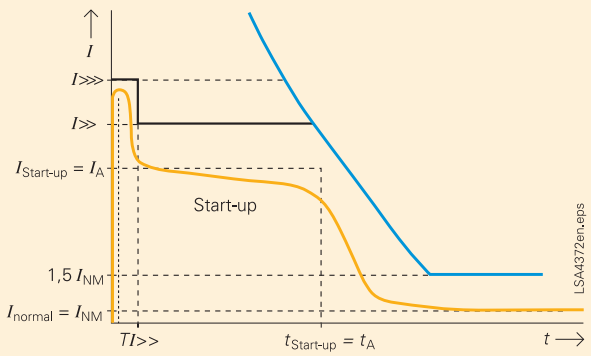

I_p> Short-circuit protection, inverse-time stage
I>> Short-circuit protection, definite-time stage
I>>> High-set instantaneous tripping stage, definite-time stage

Fig. 5 Current characteristic of motor start-up

3. Adjustments

Calculation examples are oriented towards the following motor data:

Motor/system data	
Current transformer phase I_{NPRIM}/I_{NSEC}	100 A / 1 A
Current transformer earth (60/1) I_{EE}/I_{PH}	0.6 (core-balance CT)
Voltage transformer	10 kV / 100 V
Motor rated current I_{NM}	74 A
Max. permissible unbalanced load	10 %
Permissible unbalanced load period	15 s
Permissible continuous thermal current I_{Max}	$1.1 \cdot I_{NM}$
Thermal stator time constant τ_{th}	40 min
Standstill transient factor kτ	5
Start-up current I_A	$5 \cdot I_{NM}$

Data of the system and equipment to be protected is input. Some data which particularly involves motor protection functions is worthy of mention here.

For some protection functions it is important to recognize whether the circuit-breaker is closed or open. As a criterion for this overshooting or undershooting a current threshold is applied. The set value applies for all three phases. If the set current value in one phase is exceeded, the circuit-breaker is considered closed. In machines the value selected must be smaller than the machine's minimum no-load current.

Motor data is generally related to the rated motor current. A matching factor must be communicated in the system data to the 7SJ602 so that the settings for motor protection functions can be provided directly as a reference quantity.

Example:

Current transformer 100 A / 1 A
Rated motor current I_{NM} = 74 A

- Ratio of rated motor current to rated transformer current
  $I_m = I_{NM}/I_{NTRANSF} = 0.74$ [from transformer data]
  The motor's start-up current is likewise preset in the 7SJ602's system data.
  The start-up current is specified as a value related to the rated motor current (I_{NM}).
  It depends on the size and nature of the motor and in a normal load-free start-up is approximately $5 \cdot I_{NM}$.
- Motor start-up current referred to rated motor current
  $I_a = 5$ [from motor data sheet]
  In the 7SJ602, the motor's start-up time is preset in the system data. After this time the start-up current must be safely undershot.
- Motor start-up time
  $t_{START\text{-}UP} = 4.3$ [from motor data sheet]

3.1 Overload protection

For overload protection the load must be taken into account before the overload occurs; i.e. the overload function must be used with full memory.

The relay calculates the temperature rise in accordance with a thermal homogenous-body model and a thermal differential equation:

$$\frac{d\Theta}{dt} + \frac{1}{\tau_{\tau\eta}} \cdot \Theta = \frac{1}{\tau_{th}} \cdot I^2$$

Θ Present temperature rise referred to the final temperature with maximum permissible line current $k \cdot I_N$
τ_{th} Thermal time constant for heating of the object to be protected
I Present effective current referred to the maximum permissible current $I_{max} = k \cdot I_N$

SIEMENS
siemens-russia.com

The following parameters must be set:

- Set value of the k factor = $I_{max}/I_{NTransf}$
  I_{max} = maximum permissible continuous thermal current = 1.1 · I_{NM} = 81.4 A
  k = 0.82
- Set value of the thermal time constant τ_{th} in minutes
  τ_{th} = **40 min** [from motor data sheet]

For motors the t_6 time, i.e. the permissible time for the six-fold permissible continuous current, is often specified instead of the time constant.
As a result the τ_{th} is calculated as follows:

$$\text{Set value } \tau_{th}[\text{min}] = \frac{\frac{t_6}{s}}{60} \cdot 36 = 0.6 \cdot \frac{t_6}{s}$$

- Transient factor k_τ between time constant (during standstill) and running of the motor
  k_τ = **5** according to motor data
- Alarm temperature rise as a percentage of the operating temperature rise $\Theta_{ALARM}/\Theta_{TRIP}$
  Θ_{ALARM} = **90 %** [preset]

The 7SJ602 also provides the option to connect an external thermobox to the relay. This affords an opportunity to connect the coolant temperature or ambient temperature of the protected object into the relay using the serial interface and include it in the overload calculation.

3.2 Start-up time monitoring

The start-up time monitoring interprets overshooting the current value I_a> as a motor start-up. Consequently this value must be chosen so that it is safely exceeded during motor start-up in all load and voltage conditions by the actual start-up current but is not reached during permissible, short-term overload. It must also be configured above the maximum load current. The set value is related to the rated motor current. Half the value of the rated start-up current is customary. If the start-up current is 5 · rated motor current (I_{NM}), I_a> is set at 2.5 · rated motor current.
The tripping time is calculated quadratically according to the magnitude of the current:

$$t_{TRIP} = t_{START\text{-}UP} \cdot \left(\frac{I_a}{I}\right)^2 \quad \text{with } I > I_a>$$

t_{TRIP}	Actual tripping time for flowing current I
$t_{START\text{-}UP}$	Max. start-up time
I	Actual flowing current (measured quantity)
I_a	Rated motor start-up current

The following parameters must be set:

- Start-up current threshold I_a> for start-up time monitoring, referred to rated motor current I_{NM} with I_a = 5 · I_{NM} motor data entered with system data
  I_a> = **0.5** · I_a = **2.5** · I_{NM}

Should the start-up time exceed the tripping time of the overcurrent time protection, said protection is blocked during start-up after 70 ms.

- Blocking the I> / I_p stages during start-up
  NO

If the permissible locked rotor time is less than the start-up time, the rotational speed (engine stands or rotates) must be additionally requested via a binary input.

3.3 Restart inhibit

Rotor temperature simulation plays a decisive role in the restart limit. The parameters required for this such as start-up current, rated motor current and maximum permissible start-up time are configured with the system data.

The following parameters must also be set in addition during restart inhibit:

- Temperature equalization time of the rotor
  As the thermal time constant of the rotor is considerably smaller than that for the stator, a value of 1 min. at most (preset) is practicable for the temperature equalization time of the rotor.
  t_{EQUAL} = **1min** [empirical value]
- Number of maximum permissible warm start-ups
  n_W = **2** [empirical value]

If no specifications are available from the motor data sheet, empirical value 2 is set.

- Difference between the number of maximum permissible cold start-ups and the maximum number of permissible warm start-ups
  $n_c - n_W$ = **1** [empirical value]

  If no specifications are available from the motor data sheet, empirical value 1 is set.

- Factor for the thermal cooling-down time of the rotor when the machine is at standstill.
  The reduced cooling (when the motor is at standstill) in motors with self-ventilation is taken into account by the factor $k_{\tau STI}$ (related to the time constant during no-load operation). Undershooting the current threshold set in the system data as LS I> is considered as criterion for the motor's standstill.

SIEMENS
siemens-russia.com

1 is set in forced-ventilated motors.
$k_{\tau STI} = 5$ [empirical value]

If no specifications are available from the motor data sheet, empirical value 5 is set.

- Factor for the thermal cooling-down time of the rotor when the machine is running.
  This factor takes into account the different cooling-down of a loaded, running motor compared to that of a motor which is switched off. It is effective as soon as the current exceeds LS $I>$ (set in system data).
  With $k_{\tau operation} = 1$ heating and cooling-down time constants are equal under normal operating conditions.
  $k_{\tau BET} = 2$ [empirical value]
  If no specifications are available from the motor data sheet, empirical value 2 is set.
- Minimum lock-out time
  The minimum lock-out time t_{LOCK} relates to the motor manufacturer's specifications or operating conditions. It must be greater than the time of temperature equalization t_{EQUAL}.
  $t_{LOCK} = 6$ min [assumption]

3.4 Negative-sequence protection

In electrical machines, negative-sequence (unbalanced load) protection is of particular importance.

The definite-time characteristic is set up in two stages. When a first, adjustable $I_2>$ threshold is reached, a pick-up signal is given and a time stage $T\,I_2>$ started. When a second stage $I_2>>$ is reached, another signal is transmitted and the time stage $T\,I_2>>$ started. After one of the delays has elapsed, a tripping command is given. The $I_2>>$ stage is well suited to faults in the secondary transformer circuit with lower sensitivity and very short tripping time, for example.

The preset values for pick-up and time delay are mostly sufficient. If the machine manufacturer has stated values concerning continuous permissible unbalanced load and the duration of loadability as a function of the magnitude of the unbalanced load, these should have priority.

The percentage values are related to the transformer's rated current.

- Pick-up value of stage $I_2>$ (related to rated transformer current I_N)
  $I_2> = 10$ % [from motor data sheet]
- Tripping delay of stage $I_2>$
  $TI_2 = 15$ s [from motor data sheet]
- Pick-up value of stage $I_2>>$
  $I_2>> = 50$ % [preset]
- Tripping delay of stage $I_2>>$
  $TI_2>> = 1$ s [preset]

3.5 Earth-fault protection

Earth-fault protection detects earth faults in the stator winding of three-phase machines. The design of the earth-fault protection depends on how the star point of the power supply system is connected. The star point of the motor must always be set up isolated as follows. The 7SJ602 is suitable both for power systems with earthed star point and for power systems with isolated, compensated or low-resistance earthed star point. Two hardware variants cover all these system configurations. These must be taken into account when ordering.

The following depicts the earth-fault protection setting for a motor feeder in a 10 kV isolated system.

As this is an isolated system the variant must be chosen with sensitive earth-fault detection.

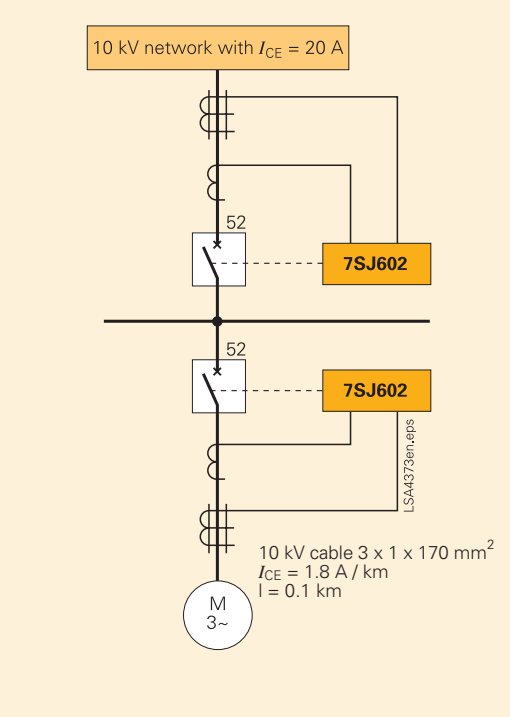

Fig. 6 Application example motor protection

SIEMENS
siemens-russia.com

In our example it is assumed that the supplying 10 kV power system has a corresponding size and, during an earth fault, a capacitive earth-fault current I_{CE} of approximately 20 A flows to the fault location. Information about the magnitude of the capacitive earth-fault current must be requested from the power system operator. Of course, the motor feeder also delivers an earth-fault current. The motor feeder must be connected via a 100 m long 10 kV cable. The motor feeder earth-fault current is calculated as follows:

$I_{CEcable} = I'_{CE} \cdot l$

$I'_{CE} = 1.8$ A/km (from the cable data sheet)
$l = 0.1$ km

$I_{CEcable} \approx 0.20$A

The following earth-fault current distribution is the result.

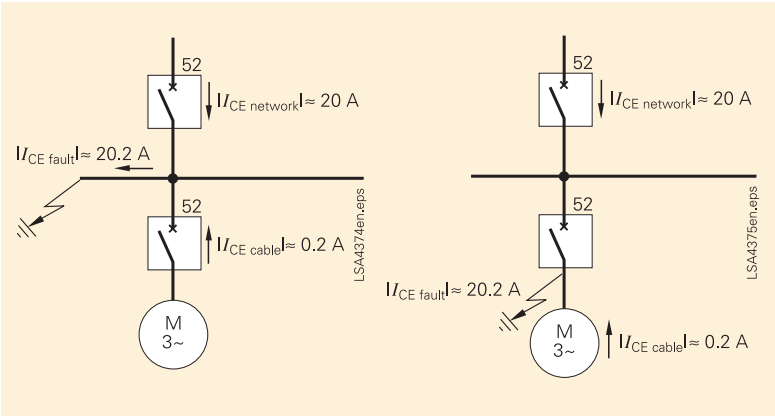

Fig. 7 Earth-fault current distribution depending on the fault location

From the current distribution it is clear, that the fault can be unambiguously located from the magnitude of the earth-fault current.

In the event of an earth fault on the busbar, only the 7SJ602 in the incoming feeder bay may pick up. If the fault location is in the motor feeder, the 7SJ602 must pick up both in the incoming feeder bay and in the motor outgoing feeder. In this example, therefore, a statement of the situation can only be made via the magnitude of the earth current.

The following setting recommendation for the motor outgoing feeder has been produced as a pickup threshold: For safety reasons $I_{CEtotal}$ must not be assumed since, for example, this may be reduced as a result of power system disconnections. As a base $I_{EE}> \approx 0.5 \cdot I_{CE}$ can be chosen.

Should an earth fault not lead to tripping, the $I_{EE}>$ function can also be adjusted only to signals. If no second pickup threshold is needed, $I_{EE}>>$ can be deactivated.

If the earth current is insufficient for fault location, an earth-fault direction determination is configured. In this case a voltage input (U_{en}) is obligatory.

With sensitive earth-fault direction determination it is not the magnitude of the current that counts but rather the component of the current vertical to a settable directional characteristic (symmetry axis). A precondition for direction determination is exceeding of the displacement voltage stage U_E and a likewise parameterizable current component that determines the direction (active [cos φ] or reactive component [sin φ]).

In electrical machines directly connected to busbar on the isolated power system, cos φ and a correction angle of around +45° can be set for the measuring mode, because the earth-fault current often consists of a superimposition of the capacitive earth-fault current from the power system and the resistive current of a load resistor.

3.6 Short-circuit protection

Short-circuit protection is the main protection function of the 7SJ602. It has in all three stages for phase currents, and two for the earth current. The overcurrent stage ($I>$) can if need be work with definite or inverse command time. High-current tripping ($I>>$) and instantaneous tripping ($I>>>$) always work with a definite command time.

For a motor's short-circuit protection, it must be ensured that the set value $I>>>$ is lower than the smallest (2-pole) short-circuit current and greater than the highest start-up current. Because the maximum inrush current is usually below 1.6 × the rated start-up current, even under unfavorable circumstances, the following setting conditions apply for the short-circuit stage $I>>>$.

$1.6 \text{ x } I_{Start\text{-}up} < I>>> < I_{k2pole}$

As safety distance, the setting value should be selected approx. 30 % above the expected start-up current.

$I>>> = 2.0 \cdot I_A = 2.0 \cdot 5 \cdot I_{NM} = 2.0 \cdot 5 \cdot 74/100 \cdot I_N \approx 7.4 \cdot I_N$

- Pickup value of the instantaneous release stage $I>>> = 7.4 \cdot I_N$

SIEMENS
siemens-russia.com

The setting of $I>>$ is aligned to the motor start-up current. A safety factor of around 1.5 must be set in order that correct start-up does not lead to tripping.

$1.5 \cdot I_{Start\text{-}up} < (I>>) < (I>>>)$

$I>>$ should be set above the motor start-up current so that it is not tripped by it.

$I>> = 1.5 \cdot I_A = 1.5 \cdot 5 \cdot I_{NM} = 1.5 \cdot 5 \cdot 74/100 \cdot I_N \approx 5.5\ I_N$

- Pick-up value of the high-current stage
  $I>> = 5.5 \cdot I_N$

The time delay for the high-current stage should be delayed until the maximum inrush current has safely decayed. The values in the motor data sheet must always have priority over the assumptions and empirical values used in these applications.

- Tripping delay for the high-current stage
  $TI>> = 50$ ms

In the overcurrent protection function an inverse-time characteristic must be chosen since this can be better adapted to the motor's operational performance.

The inverse-time short-circuit protection I_p protects the motor from short-circuits during normal operation (after start-up). The higher the short-circuit current the quicker the tripping. The extreme inverse-time characteristic must be selected for tripping.

The maximum normal current is essential for setting the overcurrent stage I_p. Pickup by overload must be ruled out, because with this mode the relay works with correspondingly short command times as a short-circuit protection, not as an overload protection.

$I_p = 1.5 \cdot I_{NM}/1.1 = 1.5/1.1 \cdot 74/100 \cdot I_N \approx 1.0\ I_N$

- Time multiplier for phase currents
  $T_p = 1.5$ s
- Set value of the overcurrent stage I_p for the phase currents
  $I_p = 1.0\ I_N$

4. Summary

In this example for setting, it is evident that a SIPROTEC relay can provide comprehensive protection of a motor, and that thereby (in addition to actual protection of the equipment) protection of the remaining power supply system is also available.

From a protection point of view, the relay offers extensive protection functions for low power class motors in addition to short-circuit protection. Because all protective functions are available in one relay, connection and testing costs are minimized.

The relay presettings are selected so that the user can apply many parameters, even if they are not well known. Motor sheet data is mainly used to select the required values, thus making setting easier.

SIEMENS
siemens-russia.com

SIEMENS
siemens-russia.com